SONA COLLEGE OF TECHNOLOGY

Learning is a Celebration!

| An Autonomous Institution |

Department of Electronics and Communication Engineering

WORLD IN SECONDS

2021 - 22

Junction Main Road
Suramangalam (PO)
Salem-636 005. TN. India
www.sonatech.ac.in

PREFACE

The Communication Systems and Networks (CSN) is an inter-disciplinary group focusing on cutting-edge research in the development of reliable and efficient delivery of information for future Internet. It encompasses several areas of study including, but not limited to, telecommunication engineering, mobile communication, sensor networks, intelligent algorithms, network security and bio-inspired networks. The thrust of the research is in the development of intelligent protocols and architectures that offer seamless support for a variety of applications and user requirements in next generation networks. Work under this group includes algorithm design, protocol development and analysis, network programming, and prototype development. The main objective of the group is to establish a world-class collaborative research environment.

BANK LOCKER SECURITY SYSTEM

AMANDEEP KAUR, BAVYA N, JANANI M

The project is designed to implement a bank locker security system based on fingerprint and OTP technology. Banks are considered secure and safe to keep the documents, money, and jewelry. Banks use lockers along with keys to keep the documents or money safe. A locker has two keys. One key is given to the user and another key is kept with the bank. Both the keys are used simultaneously to unlock the locker. The proposed security system makes use of fingerprint recognition and one-time passwords (OTP). Fingerprints are unique to an individual and a random OTP is generated and sent only to the user's mobile number. The user first enrolls his fingerprint, and if his fingerprint matches, a four-digit code is sent to the authorized user's mobile phone to unlock the locker. Biometric and GSM security are more advantageous than other systems. Arduino Uno, R307 fingerprint sensor, GSM modem are used to verify the user and unlock the bank locker.

In our proposed system, we use a two-step verification security system to replace the existing key locker system and to make the entire system less susceptible to theft and hacking in this technological age. The proposed device consists of a fingerprint sensor that serves as an electronic eye for detecting or attempted theft, as well as a signaling procedure that is controlled via GSM.

BLOCK DIAGRAM:

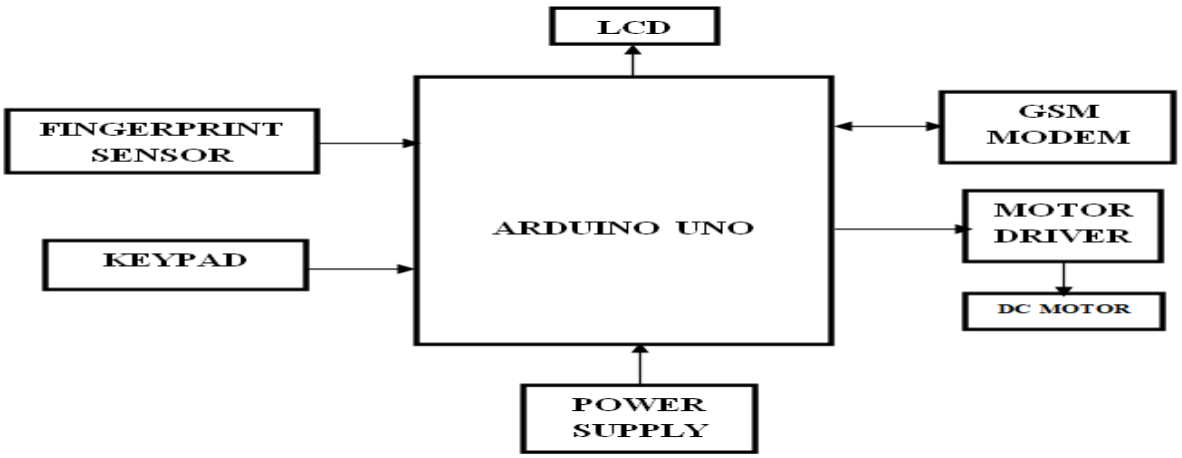

Figure:1 Block Diagram

The user places his finger on the fingerprint sensor. The fingerprint sensor verifies the user and if the fingerprint matches then an OTP is sent to the user's mobile number. When the OTP is valid, the locker is opened, and the user can access the locker. When the OTP is not valid then a message is displayed as "Invalid OTP". If the fingerprint does not match then the OTP is not sent. To notify the inactive period of the locker, a message is sent after six months and again at one year. So that the user is reminded about the inactive period in order to avoid the notice from the bank.

Arduino Uno acts as a communication medium for all the modules involved in the project. The input and output port of the micro controller are interfaced with different input and output modules of the components present in the project.

A fingerprint sensor has been connected to the microcontroller to detect the authorized user, and after detection by the fingerprint sensor, the microcontroller will send a signal to the GSM modem, which will establish communication between the system and the registered mobile number, and OTP will be sent to that number, which can then be used to open the locker.

The keypad is also connected to the microcontroller. The input to the microcontroller is given using keypad. The keypad enables enrolling, storing, removing, and verifying fingerprints, as well as opening and closing the locker. Various keypad keys are used for specific functions as well as to locate stored fingerprint locations.

The LCD is linked to the microcontroller, allowing all functions to be displayed on the screen, such as whether the fingerprint is stored or not, whether the OTP is valid or invalid, and everything up to the opening and closing of the locker.

FINGERPRINT ENROLLMENT AND VERIFICATION ENROLLMENT OF THE FINGERPRINT

The three most used keys in a keypad are A, C, and D. (A) is for searching, (C) is for enrolling, and (D) is for deleting. So, the first step in fingerprint enrollment is to press the key (C), and then the location will be displayed on the LCD, which is initially set to (0). Then, enter your fingerprint inside the (0) location and click (D) for the ID to

be displayed on the screen where your fingerprint was stored. The system will then ask you to keep your finger on the sensor and then remove it and keep it again and the fingerprint is stored in the system and after this it will be displayed on the screen that fingerprint is stored.

Click (C) on the keypad again and it will be on (0) location only, then click (A) and the location will be incremented, and finally click (D) to save the ID. For enrollment, we must place the finger on the sensor twice, so place the finger on the sensor again, remove it, and then place the finger again, and the fingerprint will be stored. If the fingerprint is not saved, it will be returned to the previous location and the enrollment procedure will be performed again.

VERIFICATION OF THE FINGERPRINT

To verify your fingerprint and obtain an OTP, press (A) on the keypad and then place your finger on the sensor. After this sensor recognizes your fingerprint, if it matches, it will send an OTP to the registered phone number. The system will then prompt you to enter the OTP, and if the OTP is valid, the locker will open; if it is invalid, the locker will remain closed. When the locker opens, it will only be open for 3-5 seconds before closing automatically. At last message will be received that locker is closed.

ARDUINO UNO

The Arduino UNO is an open-source microcontroller board based on the Microchip ATmega328P microcontroller. The board is equipped with sets of digital and analog input/output pins that may be interfaced to various expansion boards and other circuits. The board has 14 Digital pins, 6 Analog pins, and programmable with the Arduino IDE (Integrated Development Environment) via a type B USB cable. It can be powered by a USB cable or by an external 9-volt battery, though it accepts voltages between 7 and 20 volts. Arduino UNO can interact with buttons, LEDs, motors, speakers, GPS units, cameras, internet.

Figure 2 Arduino UNO

ARDUINO PIN FUNCTIONS

LED: There is a built-in LED driven by digital pin 13. When the pin is HIGH value, the LED is on, when the pin is LOW, it's off.

VIN: The input voltage to the Arduino board when it's using an external power source (as opposed to 5 volts from the USB connection or other regulated power source). You can supply voltage through this pin, or, if supplying voltage via the power jack, access it through this pin.

5V: This pin outputs a regulated 5V from the regulator on the board. The board can be supplied with power either from the DC power jack (7 - 20V), the USB connector (5V), or the VIN pin of the board (7-20V). Supplying voltage via the 5V or 3.3V pins bypasses the regulator and can damage the board.

3V3: A 3.3-volt supply generated by the on-board regulator. Maximum current draw is 50 mA.

GND: Ground pins. GND pins on the Arduino, are used to ground the circuit.

IOREF: This pin on the Arduino board provides the voltage reference with which the microcontroller operates. A properly configured shield can read the IOREF pin voltage and select the appropriate power source or enable voltage translators on the outputs to work with the 5V or 3.3V.

RESET: Typically used to add a reset button to shields which block the one on the board.

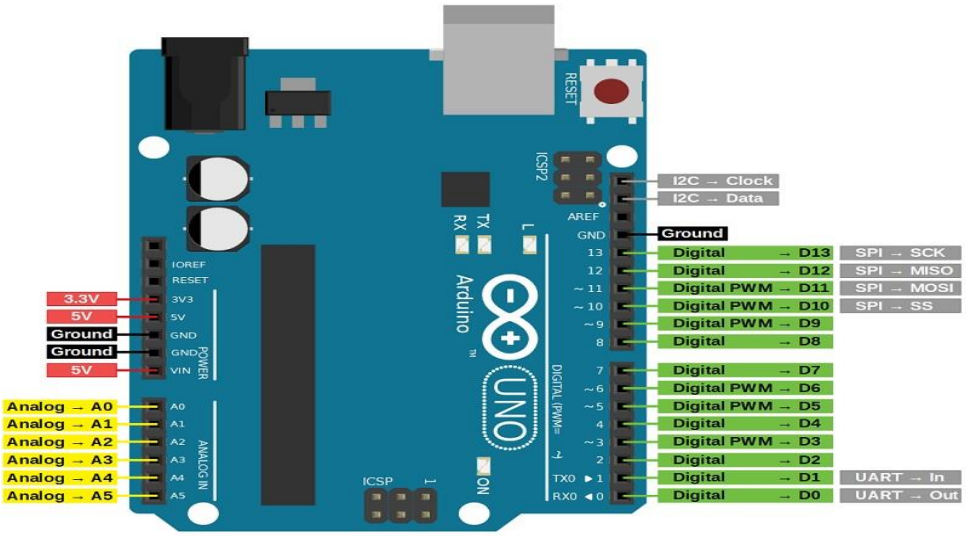

Figure 3 Arduino pin diagram

TECHNICAL SPECIFICATIONS:

- Microcontroller: Microchip ATmega328P
- Operating Voltage: 5 Volts
- Input Voltage: 7 to 20 Volts
- Digital I/O Pins: 14 (of which 6 provide PWM output)
- Analog Input Pins: 6
- DC Current per I/O Pin: 20 Ma
- DC Current for 3.3V Pin: 50 mA
- Flash Memory: 32 KB of which 0.5 KB used by bootloader
- SRAM: 2 KB
- EEPROM: 1 KB
- Clock Speed: 16 MHz
- Length: 68.6 mm
- Width: 53.4 mm
- Weight: 25 g

R307 FINGERPRINT SENSOR

The main part of an optical scanner is the Charge Coupled Device. The electrical signal created in response to the light hitting on the CCD forms pixels which are collectively joined to form an image. These pixels are converted using an ADC to make a digital image.

Figure 4 R307 Fingerprint sensor

The scanning device consists of a glass plate, on top of which you are supposed to place your finger. After the scanning takes place, an inverted image of the finger is stored. This image will show the ridges and valleys of the finger. The ridges can be spotted by the darker areas where the light reflection is greater. The valleys can be spotted by the lighter areas, where the light reflected is lesser.

The scanner is also designed to recheck the image captured. The scanner checks whether the image captured has a satisfactory pixel darkness. After all these procedures, the image will be compared with the existing stored images.

WORKING PRINCIPLE OF R307 FINGERPRINT SENSOR

Fingerprint processing includes two parts, fingerprint enrolment and fingerprint matching (the matching can be 1:1 or 1: N). When enrolling, user needs to enter the finger two times. The system will process the two-time finger images, generate a template of the finger based on processing results and store the template. When

matching, user enters the finger through optical sensor and system will generate a template of the finger and compare it with templates of the finger library.

For 1:1 matching, system will compare the live finger with specific template designated in the Module; for 1:N matching, or searching, system will search the whole finger library for the matching finger. In both circumstances, system will return the matching result, success or failure. In this project 1:2 matching is done.

Fingerprint reader/sensor module has a 4-pin external connection interface. Through serial interface, fingerprint reader/sensor module can communicate with a microcontroller runs on of 3.3V or 5V power supply. TX/TD pin of the module connects with RXD (RX-IN pin of the microcontroller), and RX/RD pin connects with TXD (TX-OUT pin of the microcontroller).

GSM (Global System for Mobile communication)

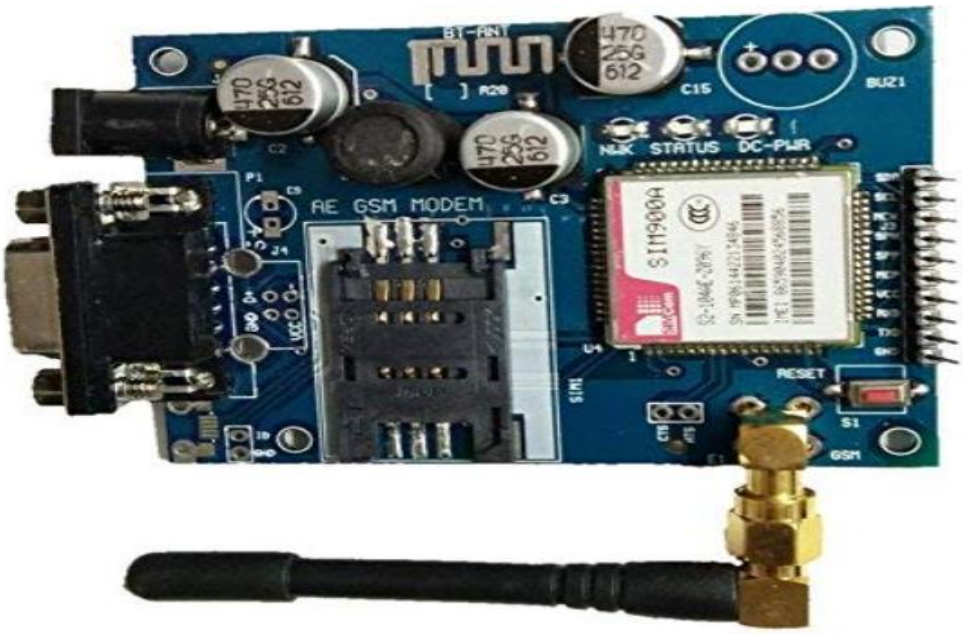

Figure 5 GSM modem

A GSM modem is a specialized type of modem which accepts a SIM card, and operates over a subscription to a mobile operator, just like a mobile phone. From the mobile operator perspective, a GSM modem looks just like a mobile phone.

A GSM modem exposes an interface that allows applications such as NowSMS to send and receive messages over the modem interface. GSM modems can be a quick and efficient way to get started with SMS, because a special subscription to an SMS service provider is not required. In most parts of the world, GSM modems are a cost-effective solution for receiving SMS messages, because the sender is paying for the message delivery.

It should also be noted that not all phones support the modem interface for sending and receiving SMS messages. In particular, most smart phones, including Blackberries, iPhone, and Windows Mobile devices, do not support this GSM modem interface for sending and receiving SMS messages.

4x4 MATRIX KEYPAD

Typically, one port pin is required to read a digital input into the controller. When there are lot of digital input that must be read, it is not feasible to allocate one pin for each of them. This is when a matrix keypad arrangement is used to reduce the pin count. The number of pins that are required to interface a given number of inputs decreases with increase in the order of the matrix.

Figure 6 4x4 Matrix keypad

Initially all switches are assumed to be released. So, there is no connection between the rows and columns. When any one of the switches are pressed, the corresponding rows and columns are connected (short circuited). This will drive that column pin (initially high) low. Using this logic, the button press can be detected.

LCD

LCDs have materials which combine the properties of both liquids and crystals. Rather than having a melting point, they have a temperature range within which the molecules are almost as mobile as they would be in a liquid, but are grouped together in an ordered form similar to a crystal.

An LCD consists of two glass panels, with the liquid crystal material sand witched in between them. The inner surface of the glass plates are coated with transparent electrodes which define the character, symbols or patterns to be displayed polymeric layers are present in between the electrodes and the liquid crystal, which makes the liquid crystal molecules to maintain a defined orientation angle.

Figure 7 LCD display

DC MOTOR

The DC motor works over a fair range of voltage. The higher the input voltage more is the RPM of the motor. In any electric motor, operation is based on simple electromagnetism. A current- carrying conductor generates a magnetic field; when this is then placed in an external magnetic field, it will experience a force proportional to the current in the conductor, and to the strength of the external magnetic field. The internal

configuration of a DC motor is designed to harness the magnetic interaction between a current-carrying conductor and an external magnetic field to generate rotational motion. In this project it is used to slide the door of the locker.

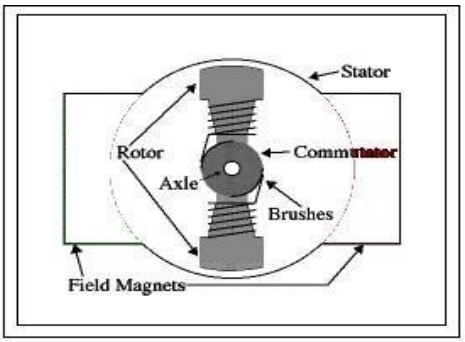

Figure 8 DC motor

MOTOR DRIVER

Motor driver is mainly used to drive motors. It can run two DC motors at the same time; also, the direction of these two motors can be controlled independently. It runs motors both in clockwise and anti-clockwise direction.

FEATURES OF MOTOR DRIVER

- Can be used to run Two DC motors with the same IC.
- Speed and Direction control is possible
- Motor voltage Vcc2 (Vs): 4.5V to 36V
- Maximum Peak motor current: 1.2A
- Maximum Continuous Motor Current: 600mA
- Supply Voltage to Vcc1(vss): 4.5V to 7V

POWER SUPPLY

Power supply circuits are built using filters, rectifiers, and then voltage regulators. Starting with an ac voltage, a steady dc voltage is obtained by rectifying the ac voltage, then filtering to a dc level, and finally, regulating to obtain a desired fixed dc voltage. The regulation is usually obtained from an IC voltage regulator unit, which

takes a dc voltage and provides a somewhat lower dc voltage, which remains the same even if the input dc voltage varies, or the output load connected to the dc voltage changes.

A block diagram containing the parts of a typical power supply and the voltage at various points in the unit is shown in fig 5.8. The ac voltage, typically 120 V rms, is connected to a transformer, which steps that ac voltage down to the level for the desired dc output. A diode rectifier then provides a full wave rectified voltage that is initially filtered by a simple capacitor filter to produce a dc voltage. This resulting dc voltage usually has some ripple or ac voltage variation. A regulator circuit can use this dc input to provide a dc voltage that not only has much less ripple voltage but also remains the same dc value even if the input dc voltage varies somewhat, or the load connected to the output dc voltage changes.

Figure 9 Block diagram of power supply circuit.

LOCKER

A locker is used to represent the bank locker. It has a sliding door which is opened and closed by the DC motor and driver circuit.

Figure 10 Locker

SOFTWARE DESCRIPTION

ARDUINO IDE

Arduino integrated development environment (IDE) is a cross-platform application written in java and derives from the IDE for the processing programming language and the wiring projects. it is designed to introduce programming to artists and other newcomers unfamiliar with software development. it includes a code editor with features such as syntax highlighting, brace matching, and automatic indentation, and is also capable of compiling and uploading programs to the board with a single click. a program or code written for arduino is called a "sketch". Arduino programs are written in c or c++. The arduino IDE comes with a software library called "wiring" from the original wiring project, which makes many common input/output operations much easier.

Most arduino boards contain a led and a load resistor connected between the pin 13 and ground, which is a convenient feature for many simple tests.] the previous code would not be seen by a standard c++ compiler as a valid program, so when the user clicks the "upload to i/o board" button in the IDE, a copy of the code is written to a temporary file with an extra include header at the top and a very simple main() function at the bottom, to make it a valid c++ program.

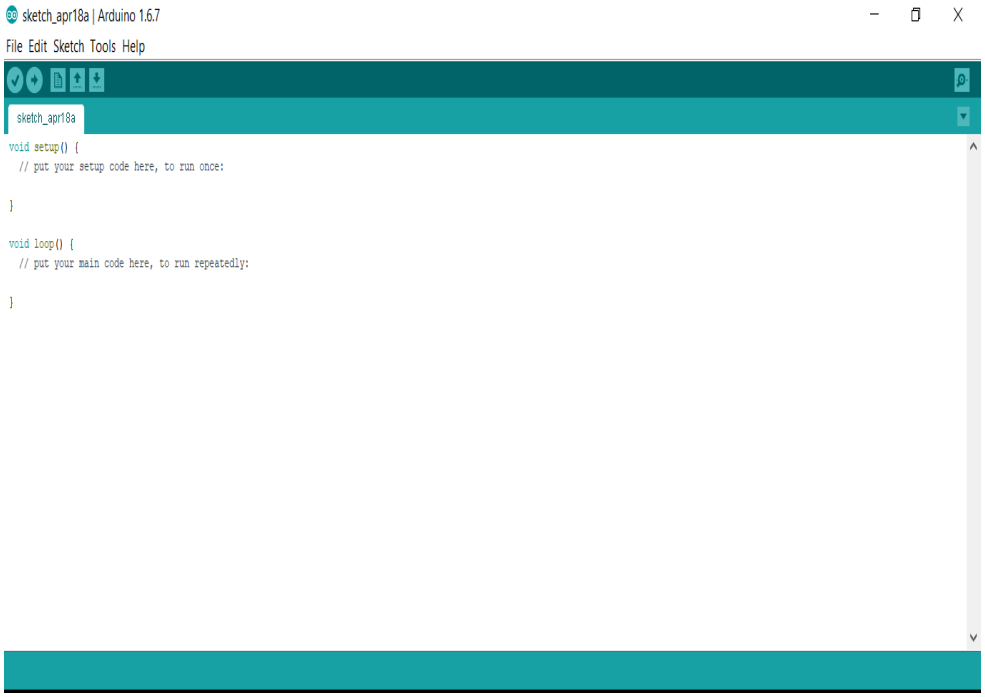

Figure 11 Screenshot of Arduino IDE platform

Arduino is open-source hardware: the arduino hardware reference designs are distributed under a Creative Commons Attribution Share-Alike 2.5 license and are available on the arduino Web site. Layout and production files for some versions of the arduino hardware are also available. The source code for the IDE is available and released under the GNU General Public License, version 2. Although the hardware and software designs are freely available under copy left licenses, the developers have requested that the name "arduino" be exclusive to the official product and not be used for derivative works without permission. The official policy document on the use of the arduino name emphasizes that the project is open to incorporating work by others into the official product. Several Arduino-compatible products commercially released have avoided the "Arduino" name by using "-duino" name variants.

MESH NETWORK BASED IRRIGATION SYSTEM USING LORA

SIVA.M, SELVAM.E, NAVEEN.R, GOKUL.S

Agriculture is considered as a backbone of our country's economy. Not only our country where most of the country's economy also depends on the agriculture. In agriculture, irrigation system plays a major role in plant growth and yield. In early decades, there this enough amount of fresh water for irrigation so we don't depend upon the localized irrigation. But nowadays freshwater scarcity is also a major problem for both drinking water supply and in farming. So, we can't go with the traditional irrigation methods for farming. Most of the farmers nowadays shift to localized irrigation method from traditional irrigation method. But it also has some disadvantages we need to take care of opening and closing of valves according to the motor which pumps water. Otherwise, it will cause disaster to the irrigation system if anything goes wrong. There also another case, most of the farmers have their agricultural field in different location with small areas. For irrigation the connect their field with the underground pipes. To reduce their difficulty in transportation for irrigation of a certain field we designed this wireless communication based embedded system.

Real time monitoring of water flow to avoid motor damage when there is no load by using a flow sensor, monitoring moisture level of the field by soil moisture sensor where excess moisture affects the plant growth and yield of the field and LORA module for long range wireless communication it can transmit signal in range 6 to 600 km. It reliable for small data transmission. The iv-transmitter section which consist of flow sensor, lora module and motor which pumps water to the other field. While the receiver section which is connected to the LORA transceiver module, moisture sensor and a solenoid valve which continuously monitor the moisture state of the field when it is activated. For simplicity purpose we name as transmitter section and receiver section both the section is capable of transmit and receive information. When the user presses the respective farming field button the transmitter section analyses and pass the

information. The respective receiver receives and process the data by this way we can control the irrigation system.

- In our proposed method we use mesh networking between LoRa module.In mesh network each and every embedded system is connected with the other embedded system which are present in their range in any form of communication either it will be wired or wireless.
- LoRa modules are transceiver modules, so it has capability of both transmission and reception of signals. Along with that we use soil moisture sensor and flow sensors to effectively regulate the irrigation field.
- Mesh network in LoRa which will be able to connect an each single LoRa module to all other LoRa modules which are present in their range directly and which are present out of the range indirectly.
- In mesh network each system relates to each system of that network. In our method each and all systems relate to other systems which are present in its range.
- So, there is direct communication and acknowledgement takes places.
- If incase the respective system is not connected directly with signal transmitting system. Other system which acts transmit and receiver until the signal is reached to its destination.
- Flow sensors monitor the water flow from the pump and turn the motor off when there is not enough water is flows in that pipe. It prevents motor damage.
- Moisture sensor monitors the field moisture level and shut the valve when it reaches required amount water.

TRANSMITTER SECTION:

In transmitter section flow sensor, relay, push button and motor are interfaced with Arduino microcontroller and then Arduino microcontroller connected with LoRa module. The LoRa module sent the signal to receiverwith respect to the push button. The buzzer sounds once the agriculture field irrigated successfully.

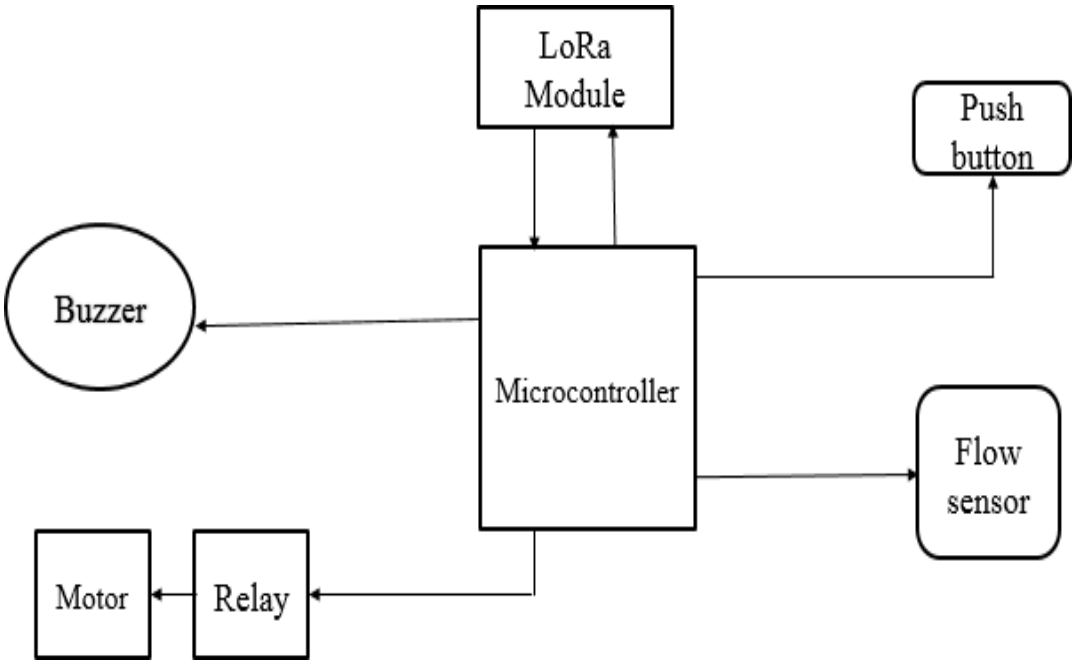

Figure 1: Block Diagram Transmitter Section

RECEIVER SECTION

In receiver section the moisture sensor and solenoid valve are connected to Arduino microcontroller and then Arduino connected to lora module. The lora module

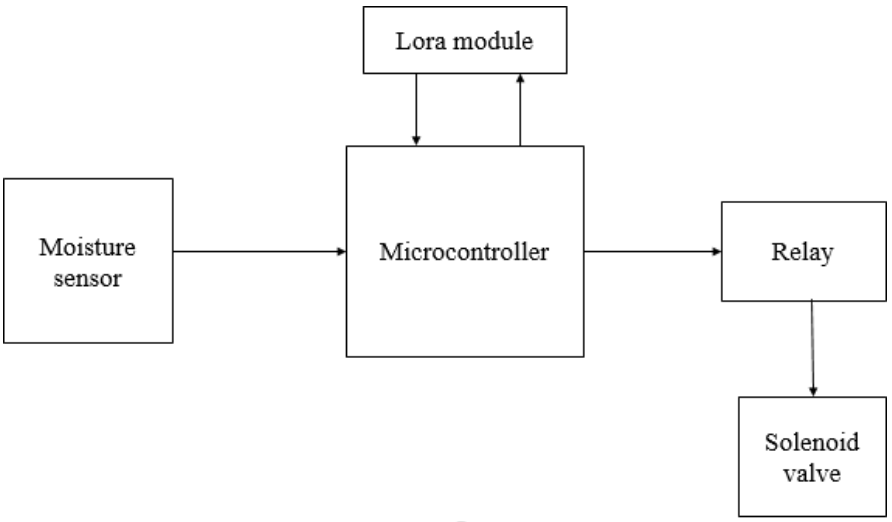

once receive the signal it sent the signal to microcontroller.

Figure 2: Block Diagram Receiver Section

ARDUINO UNO:

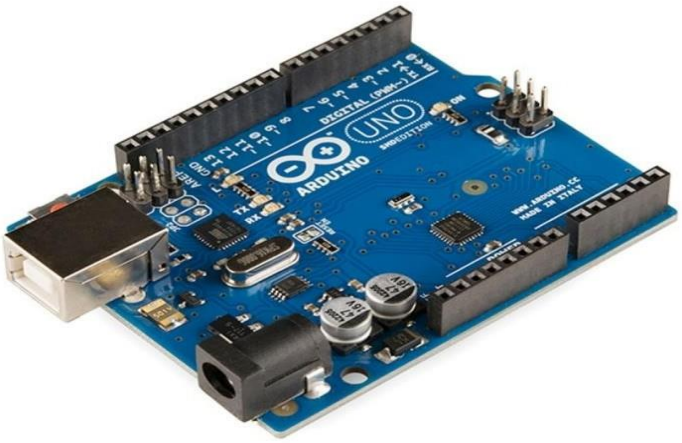

Figure 3: Arduino Uno

 Arduino Uno is a microcontroller board developed by Arduino.cc which is an open-source electronics platform mainly based on AVR microcontroller Atmega328.

 The current version of Arduino Uno comes with USB interface, 6 analog input pins, 14 I/O digital ports that are used to connect with external electronic circuits. Out of 14 I/O ports, 6 pins can be used for PWM output.

 This board comes with all the features required to run the controller and can be directly connected to the computer through USB cable that is used to transfer the code to the controller using IDE (Integrated Development Environment) software, mainly developed to program Arduino. IDE is equally compatible with Windows, MAC or Linux Systems; however, Windows is preferable to use. Programming languages like C and C++ areused in IDE.

 Apart from USB, battery or AC to DC adopter can also be used to power the board.

 Arduino Uno boards are quite like other boards in Arduino family interms of use and functionality, however, Uno boards don't come with FTDI USB to Serial driver chip.

 There are many versions of Uno boards available, however, Arduino Nano

V3 and Arduino Uno are the most official versions that come with Atmega328 8-bit AVR Atmel microcontroller where RAM memory is 32KB.

 When nature and functionality of the task go complex, Mirco SD card canbe added in the boards to make them store more information.

FEATURES OF ARDUINO UNO:

 It is an open-source platform where anyone can modify and optimize the board based on the number of instructions and task they want to achieve.

 This board comes with a built-in regulation feature which keeps the voltage under control when the device is connected to the external device.

 Reset pin is added in the board that reset the whole board and takes the running program in the initial stage. This pin is useful when board hangs up in the middle of the running program; pushing this pin will clear everything up in the program and starts the program right from the beginning.

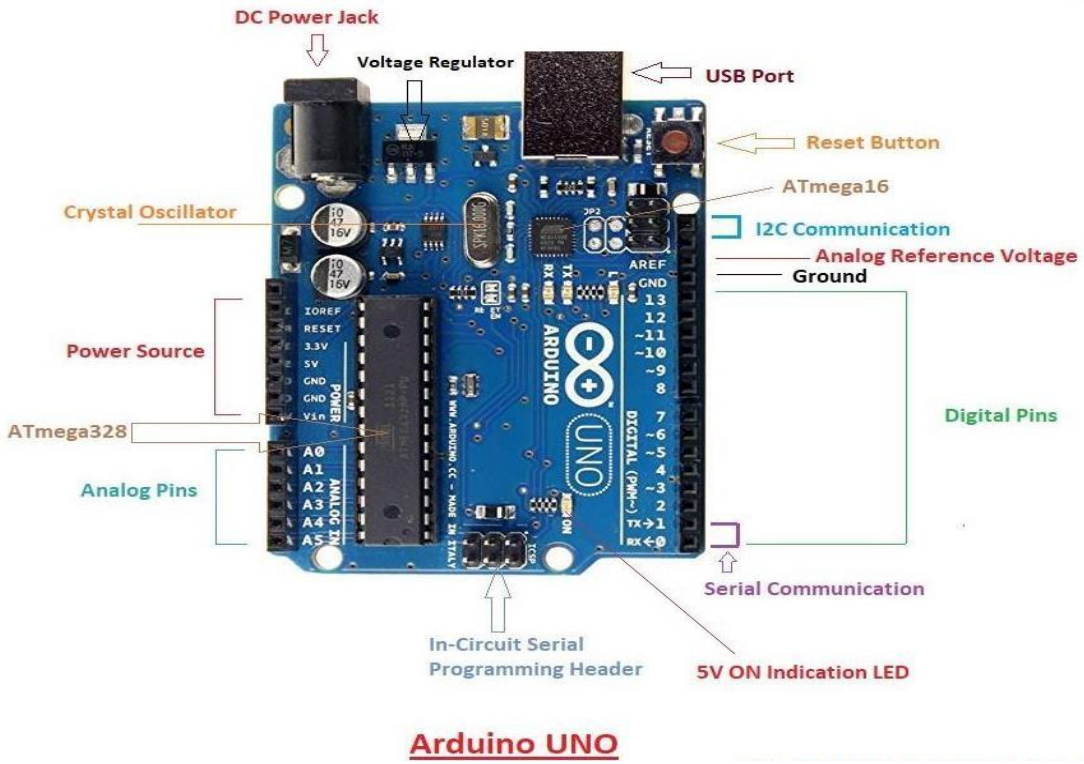

Figure 4: Arduino Uno pin configuration

 This board comes with a built-in regulation feature which keeps the voltage under control when the device is connected to the external device.

 Reset pin is added in the board that reset the whole board and takes the running program in the initial stage. This pin is useful when board hangs up in the middle of the running program; pushing this pin will clear everything up in the program and starts the program right from the beginning. There are 14 I/O digital and 6 analog pins incorporated in the board that allows the external connection with any circuit with the board. These pinsprovide the flexibility and ease of use to the external devices that can be connected through these pins. There is no hard and fast interface required to connect the devices to the board. Simply plug the external device into the pins of the board that are laid out on the board in the form of the header.

 The 6 analog pins are marked as A0 to A5 and come with a resolution of 10bits. These pins measure from 0 to 5V.13KB of flash memory is usedto store the number of instructions in the form of code.

 Only 5 V is required to turn the board on, which can be achieved directly using USB port or external adopter, it can support external power source up to 12 V which can be regulated and limit to 5 V or 3.3 V based on the requirement of the project.

ARDUINO UNO PINOUT:

 Arduino Uno is based on AVR microcontroller called Atmega328. This controller comes with 2KB SRAM, 32KB of flash memory, 1KB of EEPROM. Arduino Board comes with 14 digital pins and 6 analog pins. ON-chip ADC is used to sample these pins. A 16 MHz frequency crystal oscillator is equipped on the board. Following figure shows the pinout of the Arduino Uno Board.

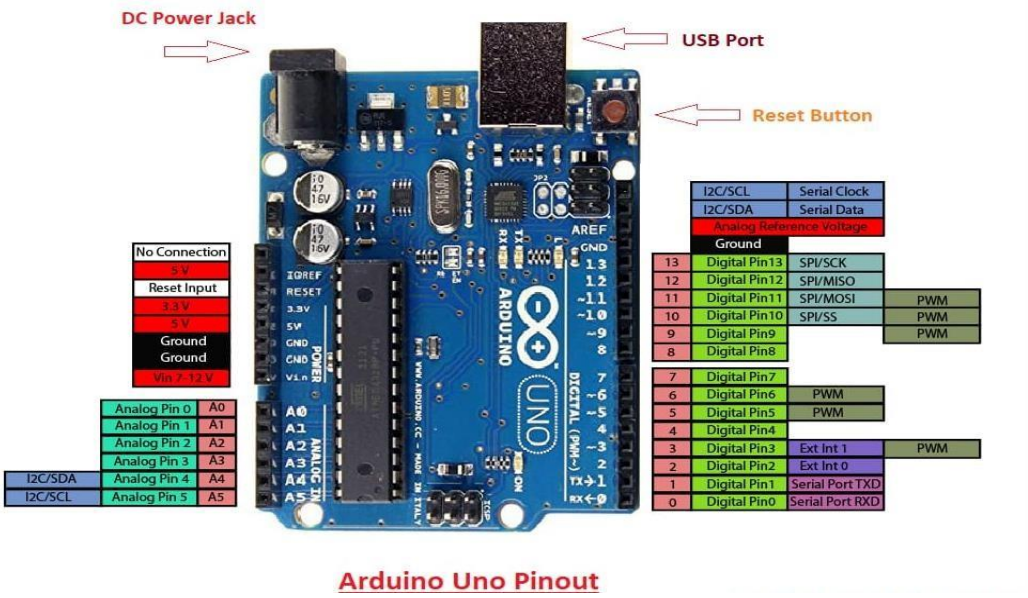

Figure 5: Arduino Uno Pin diagram

 There are several I/O digital and analog pins placed on the board which operates at 5V. These pins come with standard operating ratings ranging between 20mA to 40mA. Internal pull-up resistors are used in the board that limits the current exceeding from the given operating conditions. However, too much increase in current makes these resisters useless and damages the device.

 Arduino Uno comes with built-in LED which is connected through pin13. Providing HIGH value to the pin will turn it ON and LOW will turnit OFF.

 It is the input voltage provided to the Arduino Board. It is different than5 V supplied through a USB port. This pin is used to supply voltage. If a voltage is provided through power jack, it can be accessed through this pin.

 5V. This board comes with the ability to provide voltage regulation. 5V pin is used to provide output regulated voltage.

 The board is powered up using three ways i.e., USB, Vin pin of the board or DC power jack. USB supports voltage around 5V while Vin and Power Jack support a voltage range between 7V to 20V. It is recommended to operate the board on 5V. It is important to note that, if a voltage is supplied through 5V or 3.3V pins, they result in bypassing the voltage regulation that can damage the board if voltage surpasses from its limit.

 GND. These are ground pins. More than one ground pins are provided on the board which can be used as per requirement.

 Reset. This pin is incorporated on the board which resets the program running on the board. Instead of physical reset on the board, IDE comes with a feature of resetting the board through programming.

 IOREF. This pin is very useful for providing voltage reference to the board. A shield is used to read the voltage across this pin which then select the proper power source.

 PWM. PWM is provided by 3,5,6,9,10, 11pins. These pins are configured to provided 8-bit output PWM.

 SPI. It is known as Serial Peripheral Interface. Four pins 10(SS), 11(MOSI), 12(MISO), 13(SCK) provide SPI communication with the help of SPI library.

 AREF. It is called Analog Reference. This pin is used for providing a reference voltage to the analog inputs.

 TWI. It is called Two-wire Interface. TWI communication is accessed through Wire Library. A4 and A5 pins are used for this purpose.

 Serial Communication. Serial communication is carried out through two pins called Pin 0 (Rx) and Pin 1 (Tx). Rx pin is used to receive data while Tx pin is used to transmit data.

 External Interrupts. Pins 2 and 3 are used for providing external interrupts. An interrupt is called by providing LOW or changing value.

NODEMCU:

NodeMCU is an open-source Lua based firmware and development board specially targeted for IoT based Applications. It includes firmware that runs on the ESP8266 Wi-Fi SoC from Es press if Systems, and hardware which is based on the ESP-12 module.

Figure 6: NodeMCU ESP8266

LORA MODULE:

 It is a new wireless protocol designed specifically for long-range, low-power communications. LoRa stands for Long Range Radio and is mainly targeted for M2M and IoT networks. This technology will enable public or multi-tenant networks to connect several applications running on the same network.

 LoRa modules are half duplex transceiver module. Which are works in couple of different frequency based on the location of the country.

 For our region it works in 433mhz frequency.

Figure 7: LoRa module

 Each LoRa gateway can handle up to millions of nodes. The signals can span a significant distance, which means that there is less infrastructure required, making constructing a network much cheaper and faster to implement.

 LoRa also features an adaptive data rate algorithm to help maximize the nodes battery life and network capacity. The LoRa protocol includes a number of different layers including encryption at the network, application and device level for secure communications.

FEATURES:

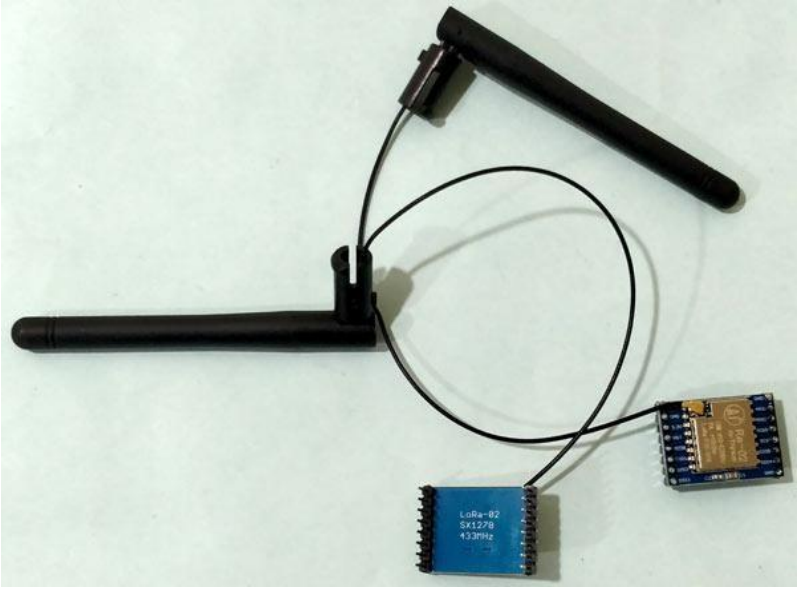

Figure 8: Lora module with antenna

 The following table showcases some of the key features of the LoRa protocosuch as range, modulation, and capacity.

Specification	LoRa Feature
Range	2-5Km Urban (1.24-3.1 mi), 15Km suburban (9.3 mi)
Frequency	ISM 868/915 MHz
Standard	IEEE 802.15.4g
Modulation	Spread spectrum modulation type based on FM pulses which vary.
Capacity	One LoRa gateway takes thousands of nodes
Battery	Long battery life
LoRa Physical layer	Frequency, power, modulation and signaling between nodes andgateways

LoRa technology is ideal for battery-operated sensor and low powerapplications, including

- Internet of Things
- Smart agriculture
- Smart city
- Sensor networks
- Industrial automation
- Smart meters
- Asset tracking
- Smart home
- M2M

WATER FLOW SENSOR:

FLOW SENSOR WHICH WORKS IN 5 VOLT DC SUPPLY IT PRODUCES AN DIGITAL OUTPUTFOR THE CONTROLLERS

 Which has the ability to detect rate of water flow and the quantity of water flowed through the pipe.

Figure 9: Water flow sensor

 It has the capacity to give output for each and every second based on user choice.

WORKING PRINCIPLE:

 Water flow sensor consists of a plastic valve from which water can pass. A water rotor along with a hall effect sensor is present the sense and measure the water flow.

 When water flows through the valve it rotates the rotor. By this, the changecan be observed in the speed of the motor. This change is calculated as output as a pulse signal by the hall effect sensor. Thus, the rate of flow of water can be measured.

 The main working principle behind the working of this sensor is the Hall effect. According to this principle, in this sensor, a voltage difference is induced in the conductor due to the rotation of the rotor. This induced voltage difference is transverse to the electric current.

 When the moving fan is rotated due to the flow of water, it rotates the rotor which induces the voltage. This induced voltage is measured by the hall effect sensor and displayed on the LCD display.

 The water flow sensor can be used with hot waters, cold waters, warm waters, clean water, and dirty water also. These sensors are available in different diameters, with different flow rate ranges.

 These sensors can be easily interfaced with microcontrollers like Arduino.For this, an Arduino microcontroller board for processing, a Hall effect water flow sensor, a 16×2 LCD display, and Breadboard connecting wiresare required. The sensor is placed at the water source inlet or at the openingof the pipe.

 The sensor contains three wires. Red wire to connect with supply voltage. Black wire to connect to ground and a yellow wire to collect output from Hall effect sensor. For supply voltage 5V to 18V of DC is required

WORK AND OUTPUT:

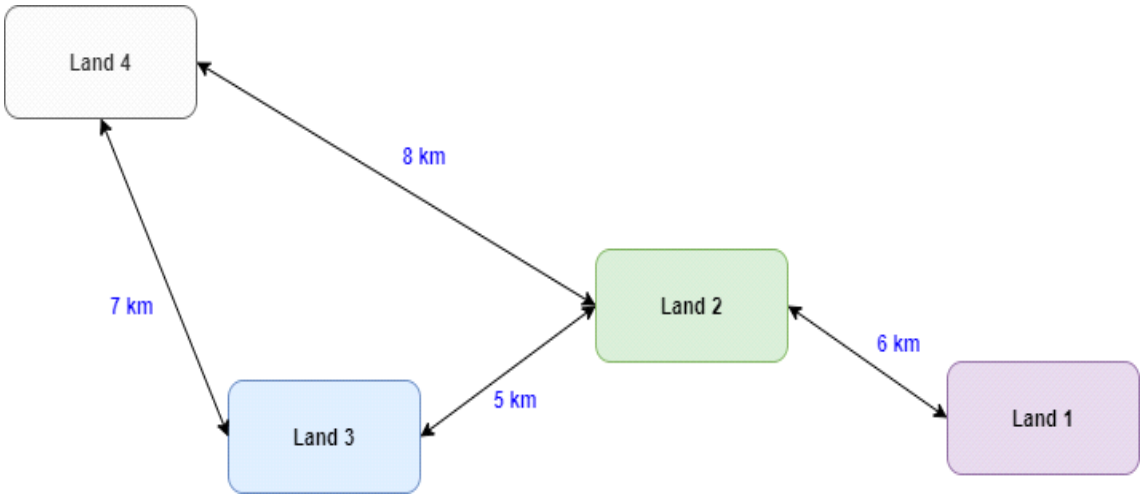

Figure 10 geographical diagram of land

The above diagram represents the geographical distance of each agricultural land, each agricultural land is equipped with the LoRa module with Mesh networking

capability.

BLOCK DIAGRAM OF MAIN CONTROL UNIT:

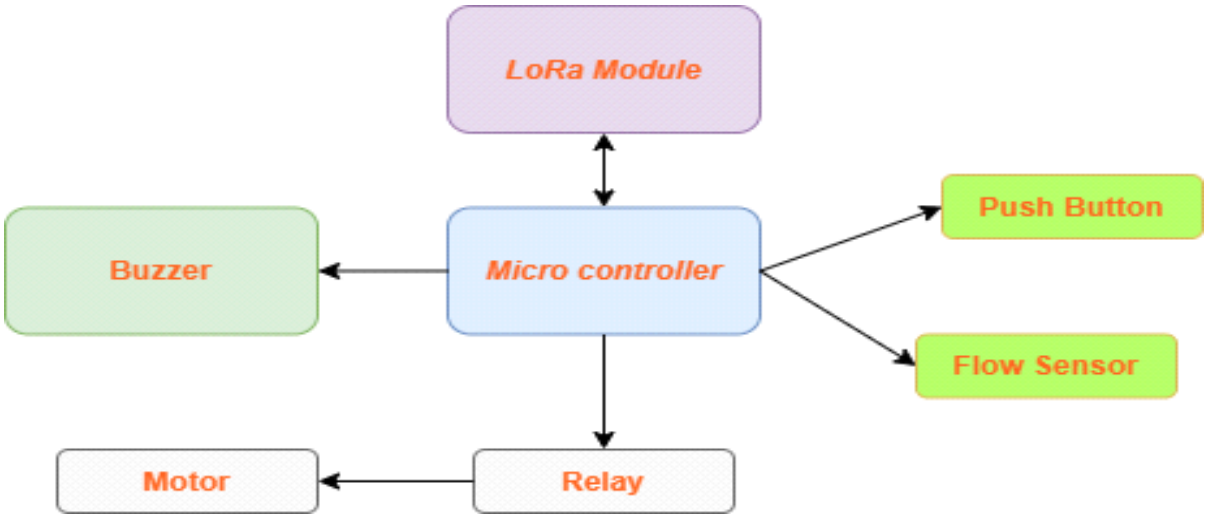

Figure 11: Block diagram of Main control unit

- The main controller unit is connected with flow sensor which is used to detect the water flow, the motor can be controlled by using the relay whichis controlled by the micro-controller. The buzzer is used to indicate any error during the irrigation process and to indicate the completion ofirrigation.
- The commands to control the sensors and actuators are passed between the micro-controllers using Radio waves with the help of LoRa module.

BLOCK DIAGRAM OF CONTROL UNIT IN AGRICULTURAL LAND

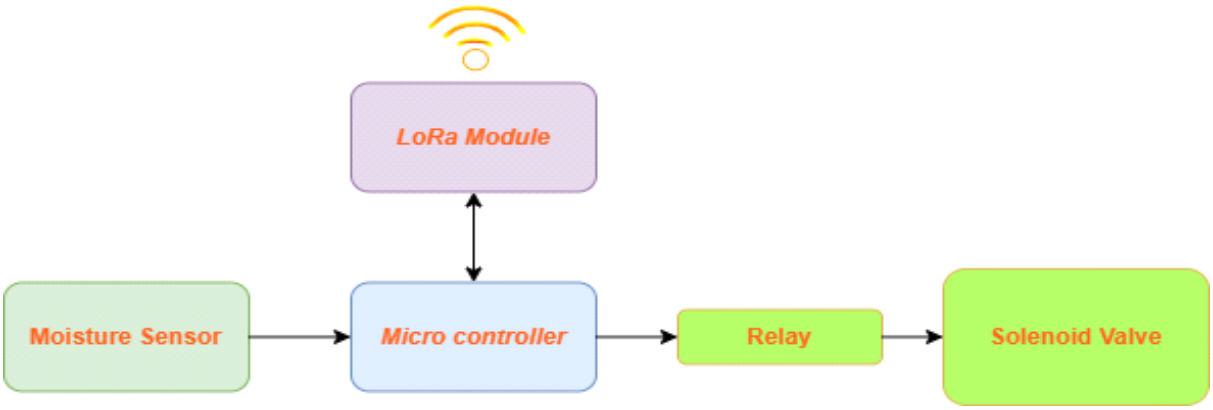

Figure 12: Block diagram of control unit in agricultural land

The micro-controller in the agricultural land relates to solenoid valve tocontrol the water flow, moisture sensor to sense the moisture level and LoRa module to make

RF communication with other micro-controllers.

FLOW CHART OF MAIN CONTROL UNIT

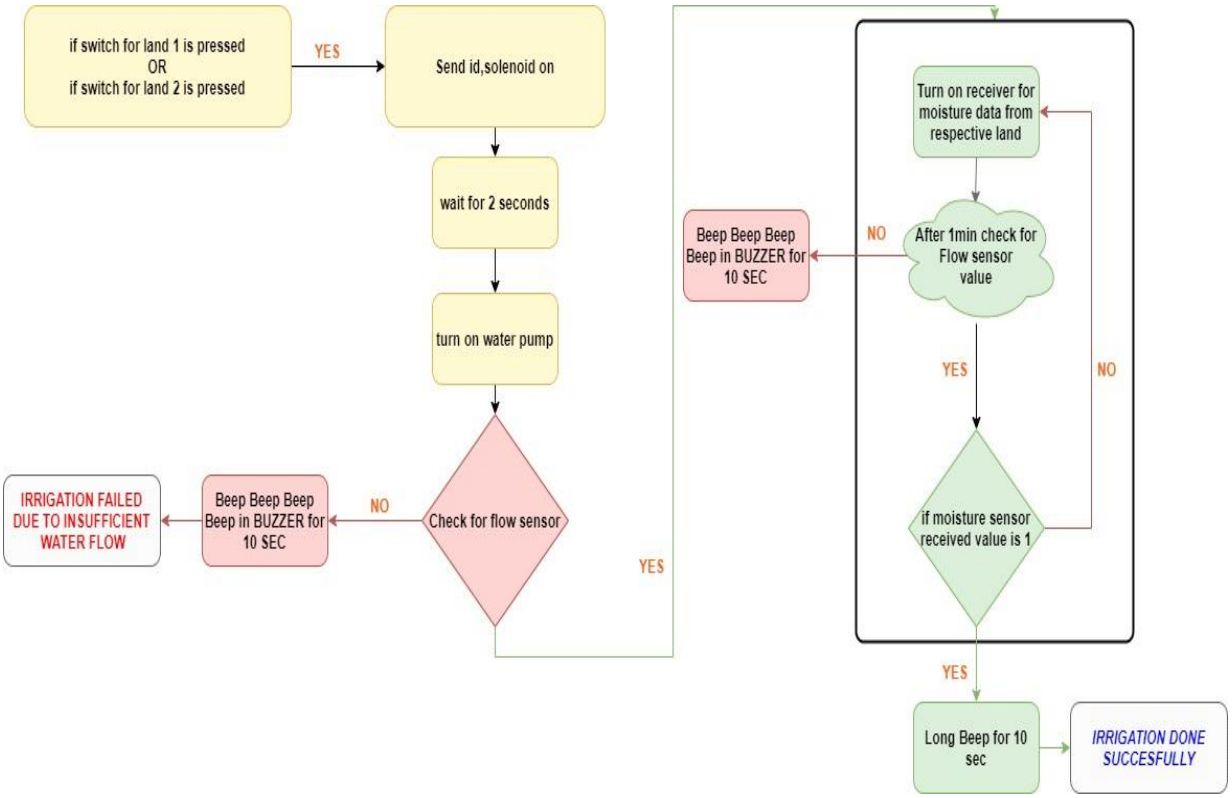

Figure 13: Flow chart of main control unit

- The command to turn on the solenoid valve from the main controller unit to the respective agricultural lands is based up on the push button status.
- After the command the water pump is turned on and the water flow is monitored using the flow sensor.
- If no water flow is detected, then the motor is turned off and buzzer is beeped.
- If the flow is detected, then the control unit waits for the moisture sensor value to stop the motor.
- If the moisture sensor data is received the main control unit, then it indicates the successfull irrigation of the agricultural land.

FLOW CHART OF CONTROL UNIT IN THE AGRICULTURAL LAND

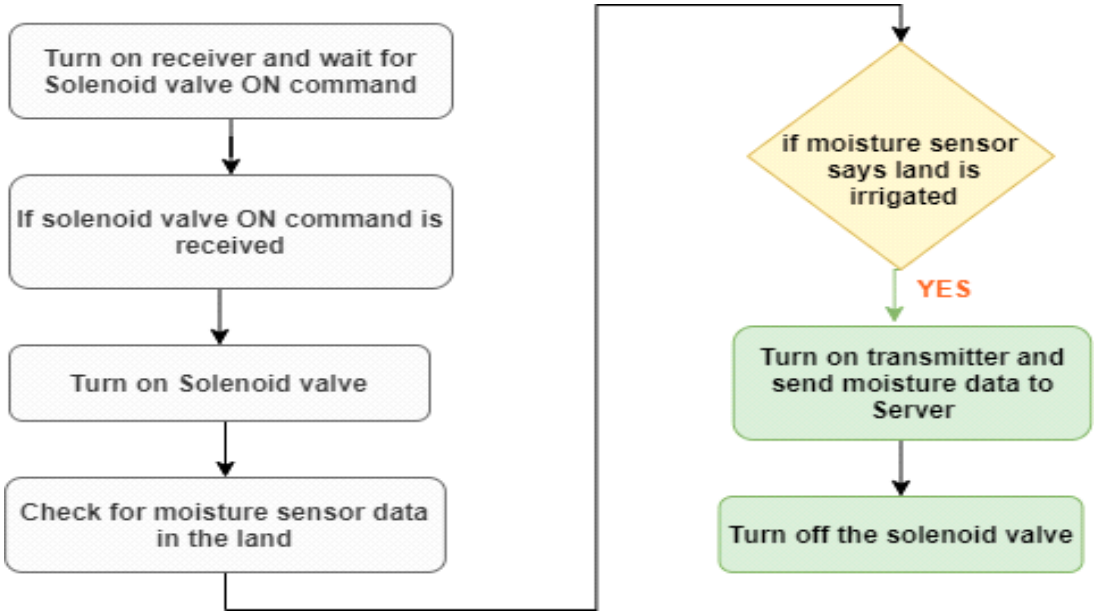

Figure 14: Flow chart of control unit in the agricultural land

- When the control unit in the agricultural land receives the " turn on solenoid valve " command then the solenoid valve is turned on and the moisture sensor value is continuosly monitored by the control unit.

- If the the land is moistured then the control unit in the agricultural land sends the "turn off motor command " to the main control unit, followed by this the solenoid valve of that land is turned off.

- In this diagram the agricultural fields are having the separate LoRa moduleand solenoid valve and the moisture sensor. The fields are placed various distance from home.

- Turn on receiver based upon the user recommend and wait for some time to receive ON command from solenoid valve. when the solenoid ON command is received and it turn ON the motor.

- The flow sensor Sens the flow of water. If there is no water flow in the motor the flow sensor turns off the motor automatically.

- Moisture sensor in land sends the data to Arduino, if the land is irrigated the

moisture sensor indicates us about the moisture of land.

- If the land is irrigated successfully the moisture sensor send the message to Arduino and the buzzer sounds for 10 sec andit turn off the motor.

- After the irrigation the transmitter gets ON and it send moisture data to server. Once receiving command from server, the solenoid valve gets turned OFF.

- The switches for respective land is placed in home. consider the irrigationfields are land 1, land 2, land 3, land 4. If the switch of land 1 is turn on the solenoid valve of land 1 gets ON. After 2 seconds the water pump gets turned ON.

- Flow sensor is used to monitor the water flow. If water level is zero flow sensor indicates about it.

- Checking of flow sensor if there is a waterflow, it turn ON the receiver to receive data from respective land. If there is no water flow, the beep sounds in buzzer for 10 secs, and it indicates us irrigation of land is failed due to insufficient water flow. then again check for flow sensor after 1 min.

- If water flows, then further process continues, if not beep sounds in buzzerfor 10 sec. turn ON receiver to receive moisture data and if received valueis 1, then long beep sounds for 10 sec. if received value is 1 the land is irrigated successfully.

OUTPUT

Transmitter turn on the motor after flow is detected and send signal to receiver about their state.

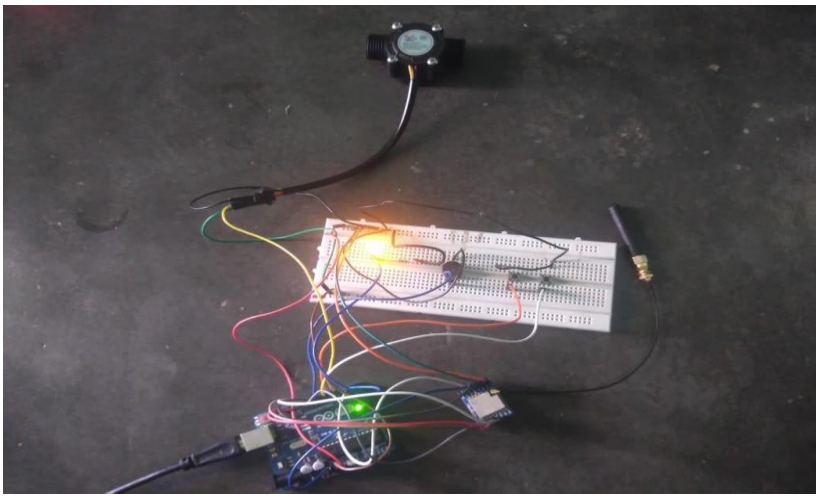

Figure 15 output diagram of transmitter

After receiving transmitter signal, receiver turn on the solenoid value and

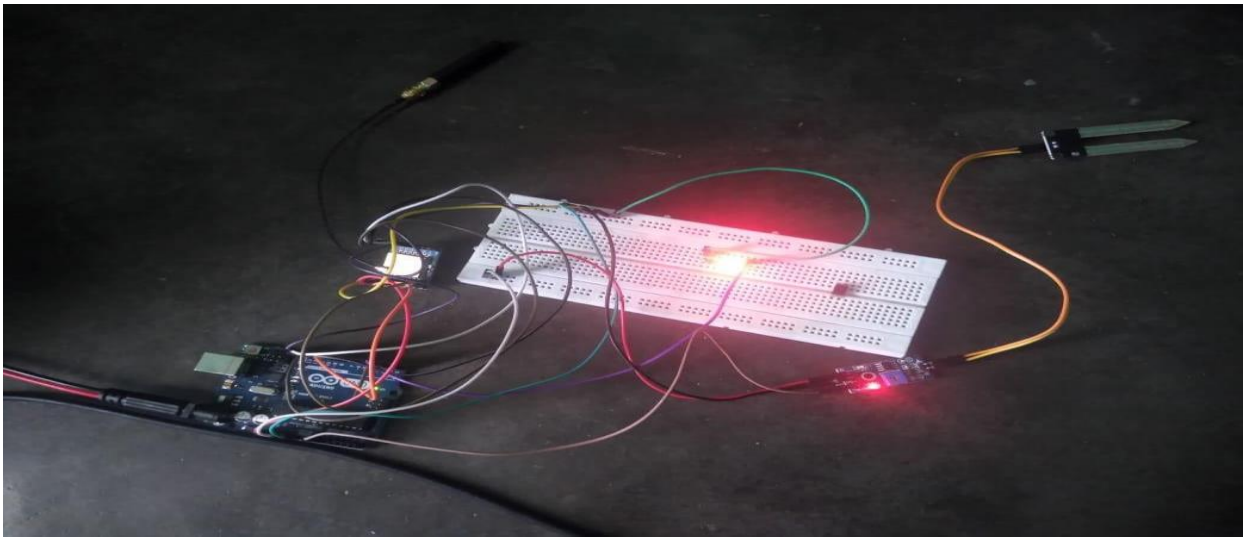

checkfor moisture level.

Figure 16 output diagram of receiver

SERIAL MONITOR OUTPUT

TRANSMITTER PROGRAM OUTPUT

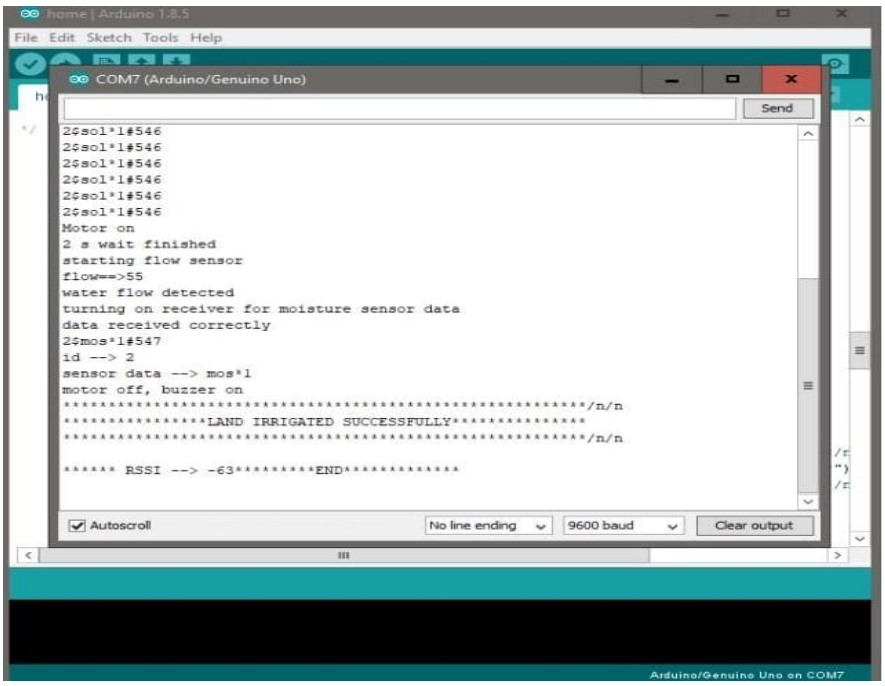

Figure 17: transmitter program output

Once the motor is on the flow sensor detect the flow of water. After that the solenoid valve gets open. If land is irrigated successfully moisture sensor send the 1

code to Arduino.

RECEIVER PROGRAM OUTPUT:

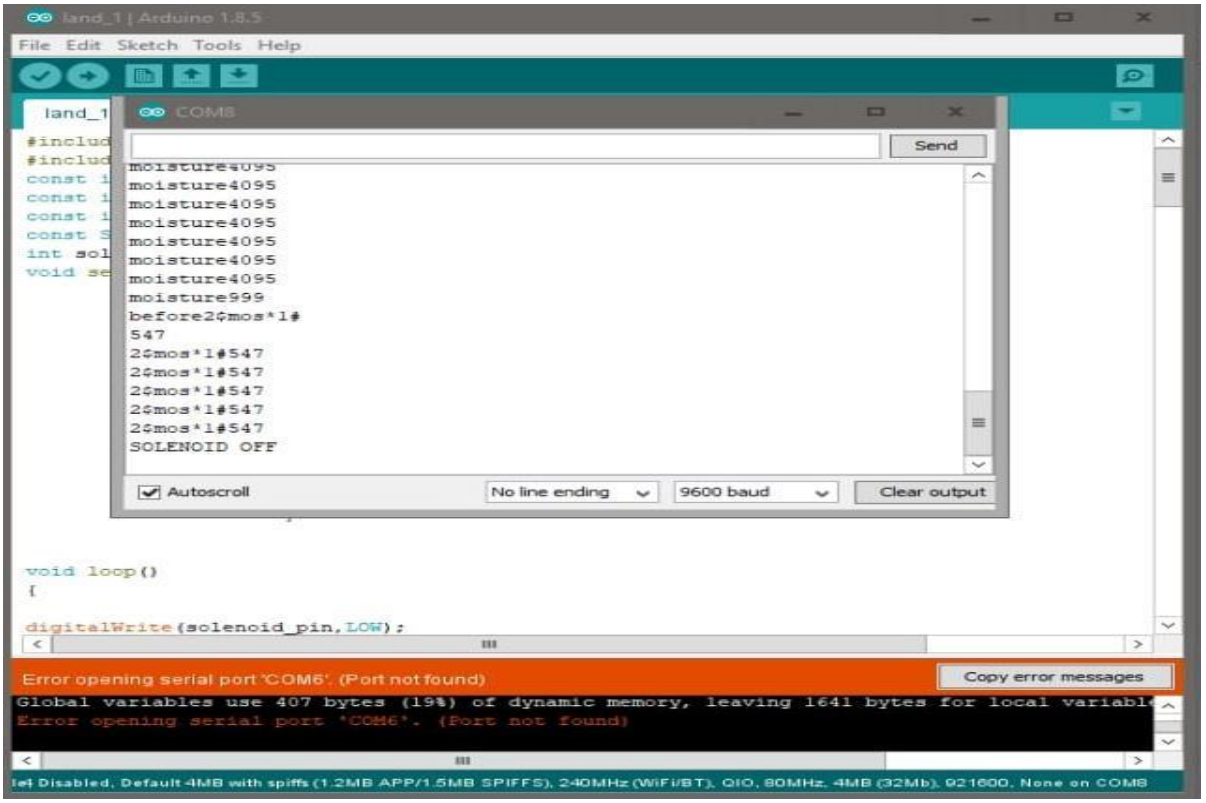

Figure 4.31 receiver program output

After irrigated the motor will off and the buzzer sounds for 10sec. after thatthe solenoid valve will closed automatically.

MARINE BOUNDARY ALERT AND SAFETY SYSTEM FOR FISHERMEN

M. ARULPRIYA , S. SUSHMA

It's become a basic necessity to remember one's safety in this modern, fast-paced, and unstable world. This project is made up of two components: a transmitter (for fishermen) and a receiver (for the rest of us) (coastal guard side). A GPS receiver is used to find the current latitude and longitude location of the fishing boat or vessel. Using GPS, the current latitude and longitude values can be found out and is sent to the microcontroller unit. Then the controller unit finds this location by comparing the present latitude and longitudinal values with the predefined value which is stored in the microcontroller. From this result of the comparison, this technique alerts the fishermen of their reach to the nautical border and to trigger an alarm which consists of a Piezo-buzzer to circumspect the fishermen. If the boat is in safer area, then the LCD displays safe zone. Thus, it can be made clear that the boat is in safer area. In case, it moves further and reaches the warning zone, the LCD displays warning zone and the boat gets reversed by using motor driver. In addition, here we are using ultrasonic sensor which is used to find obstacles in the way of boat and vibration sensor which is to sense underground pressure. If any obstacles id detected the warning will be displayed on the LCD and also if the underground pressure is high there is a possibility of Tsunami and alert will be given through LCD display. A RF transceiver is used to transmit the data from the boat to coastal guard. In the first step, the data is transmitted from the boat. Finally, the GPS data is transmitted to the coastal guards by using GSM module and RF transceiver.

Our system, mainly for fishermen are wont to detect the maritime border between the 2 countries. This mainly happens when fisherman crosses maritime border of neighbouring country as he is not aware of the boundaries in sea. during this proposed method is to achieve reliable communication stumped through RF communication. Here we've two modules, module 1 is fixed in boat which is transmitter side and module 2 is receiver side which is at coastal guard side. during this system, GPS

module updates the present locations of the boat. The controller unit which compares the GPS location value ranges with predefined border GPS location. If the boat approaches almost the border GPS location, the controller unit alerts the fisherman about their location within the indicator panel, hence they're going to change their movement position. Here we'll give three intimations even after reaching the restricted zone if the boat isn't turned to safer zone then the boat is going to be reversed to safer zone using motor driver. The position of the boat is notified to coast guards through RF transmission. Additionally, ultrasonic sensor and vibration sensor is employed during this project. Ultrasonic sensor is employed to seek out obstacles within the way of boat and if there are any obstacles detected the intimation are going to be send to fishermen through LCD display and also to coastal guard through GSM. Vibration sensor is employed to seek out underground water pressure if the pressure is high there's possibility of Tsunami and indication are going to be sent to both fishermen and coastal guard.

The proposed system uses a GPS concept to receive signals from the satellite and provides this position of the boat. The latitude and longitude of the maritime boundary. the actual layer level i.e., border is often predefined, and this may be value is compared with predefined values and if these values are same, immediately the particular operation are getting to be done i.e., the warning is given to fishermen through buzzer and LCD display and to coastal area through GSM.

This technique also uses a RF transmitter to information to the bottom station which microcontroller receives information from the receiver and intimation is given using GSM It provides an intimation to both fisherman and to coastal guard. In concept, Ultrasonic sensor & vibration sensors are wont to detect the obstacles on the way of boat and underground pressure within the sea. And these parameters also monitored within the coastal guard side. A system is designed which protects the fishermen by notifying the country border to them, by using Global Positioning System (GPS), GSM and RF transceiver. A GPS receiver is used to find the current

location of the fishing boat or vessel. Using GPS, the current latitude and longitude values can be found out and is sent to the microcontroller unit. Then the controller unit finds the current location by comparing the present latitude and longitudinal values with the predefined value.

The proposed system can be used for the protection of fishermen. Since this system has better efficiency, it has good data transmission which helps the fishermen for their safety. The high range helps for the protection of fishermen and also helps them retain in safe zone. RF based transceiver along with microcontroller helps the fishermen to detect their boundary. The alert system which we have developed will provide an effective solution for fishermen's problem and prevent them from crossing other country border. The application can save the lives of many fishermen. Saves lives of fishermen and the country from unwanted dispute with the neighboring nations. Additionally, obstacles can be detected, and Tsunami warning can be given.

The proposed system has been proved better than the existing system in all the parameters. This system gives the result for better identification of the location, differentiation of safe and danger zones, proper communication system with better range for transmission. Obstacle's detection warning and Tsunami warning are also given to both fishermen and coastal guard. The RF module is responsible for transmission and reception of data i.e., the exact location of the boat with latitudinal and longitudinal values. The microcontroller Node MCU helps in gathering and processing the information from the GPS tracker, Ultrasonic sensor and vibration sensor. Based on this data, the LCD, buzzer and fuel motor driver work. If the boat reaches near the border, then the buzzer rings, LCD displays the "Danger Zone" and the engine gets automatically reversed using motor driver. This data is transmitted by the RF transmitter to the RF receiver. This data is further processed by the microcontroller Arduino. By the use of GSM module, this information is sent to the coastal guards of the location of the boat and also Tsunami warning and Obstacle's detection. The advanced border security alert for fishermen is discussed. Also, data transmission

through RF is brought in here which provides further additional advantages to the safety of the fishermen. The architectural design consists of a GPS device which is interfaced to the Microcontroller which in turn is connected to the alarm circuit and LCD display. The GPS information tracked in the control room is sent to through a GSM system and the information is immediately sent to the border.

The GPS Modem will continuously give the signal which determines the latitude and longitude and indicates the position of the fishermen to them. Then it gives the output which gets read and displayed in the LCD. The same data is sent to the mobile of the fisherman and simultaneously the same data is sent to the Sea border security.

An EEPROM is used to store the data, received by GPS receiver. The hardware which interfaces with microcontroller are LCD display, GSM modem and GPS Receiver. GPS (Global Positioning System) is increasingly being used for a wide range of applications. It provides reliable positioning, navigation, and timing services to worldwide users on a continuous basis in all weather, day and night, anywhere on or near the Earth. 28 satellites inclined at 55° to the equator orbit the Earth every 11 hours and 58minutes at a height of 20,180 km on 6 different orbital Lanes and each one of these satellites has up to four atomic clocks on board. All we require is an accurate clock. By comparing the arrival time of the satellite signal with the onboard clock time, at which the signal was emitted, the latitude and longitudinal degree of the boat's location is determined. The current design is an embedded application, which will continuously monitor a moving Boat and once the boat goes beyond the level of the defined layer the particular operation will be done. For doing so an AT89c51microcontroller is interfaced serially to a GSM MODEM AND GPS receiver. GPS working the proposed system uses a GPS receiver which receives signal from the satellite and gives the current position of the boat. The proposed system is used to detect the border of the country through the specified longitude and latitude of the position, not only between Sri Lanka and India but all over the world. The particular layer level i.e., border can be predefined, and this can be stored in microcontroller memory. The current value is compared with predefined

values and if the sea values are same, immediately the particular operation will be done i.e., the microcontroller gives instruction to the alarm to buzzer. It also uses a message transmitter to send message to the base station which monitors the boats in the sea. The system provides an indication to both fisherman and to coastal guard. Thus, it saves the lives of the fisherman and alerts the base station to provide help.

From this result of the comparison, this system alerts the fishermen of their reach to the nautical border and to trigger an alarm which consists of a Piezo buzzer to circumspect the fishermen. If the boat is in normal area, then the LCD displays normal zone. Thus, it can be made clear that the boat is in normal area. In case, it moves further and reaches the warning zone, the LCD displays warning zone and here we will give three intimation and when the boat is nearer to danger zone and still not turned to safer zone then the boat will be reversed automatically using motor driver. Additionally, we are using ultrasonic sensor which is used to find obstacles in the way of boat and vibration sensor which is to find underground water pressure. If obstacles detected or pressure of the sea is high then alert will be given to fishermen through LCD and to coastal guard through GSM.

BLOCK DIAGRAM

Module 1 is the transmitter side. The GPS tracker plots the exact location by getting the details using the satellites. It is then sent to the Node MCU microcontroller. By comparing the values with the predefined set of values, the LCD displays whether the boat is in safe zone or danger zone. The engine automatically gets reversed using motor driver when it is in the range of 1 KM to the danger zone. And the buzzer automatically rings. Ultrasonic sensor is used to find obstacles in the way of boat and if any obstacles detected the alert will be sent to fishermen and coastal guard. Vibration sensor is used to find underground water pressure if the pressure is high there is a possibility of Tsunami and alert will be given to fishermen and coastal guard. The RF transmitter sends the information to the to the RF receiver. Further action takes place in the receiver side.

Module 2 depicts the receiver side. It receives the information from the transmitter. The RF transmitter sends the information to the microcontroller (Arduino). It further sends to the GSM module. From the GSM module, the message is sent to the coastal guards based on the location of the boat, whether it is in safe mode or danger mode and Tsunami alert and if any Obstacles detected.

The GPS receiver receives the signal and converts it into desired data message. The data is sent to microcontroller and microcontroller extracts the latitude and longitude from the data. The positions are compared with the stored Boundary latitude and longitude positions. If the vessel is found beyond the border, then an alarm is generated along with a message transmission by a GSM. Microcontroller receives the data from the GPS receiver through UART. The data received contains many details along with latitude and longitude. The latitude and Longitude of the current position is separated from the detailed data from GPS. The current positions are compared with already stored latitude and longitude of countries boundary locations. At first the latitude is compared with stored latitude which identifies if the current position is located near to the boundary. If the latitude matches, then the adjacent latitudes and longitudes of the present latitude is retrieved from the microcontroller. The current position received from GPS is stored as S1(latitude), S2 (longitude). The latitude S1 is compared with stored latitudes. Each radius corresponds to the distance calculated to the satellite. All possible distances to the satellite are located on the circumference of the circle. If the position above the satellites is excluded, the location of the receiver is at the exact point Where the three circles intersect beneath the satellites.

Although the distance to the satellites can only be roughly estimated at first, a GPS receiver can precisely calculate these distances relative to each other. Because, the relative size of the spheres is known, there is only one possible point where they can intersect. An LCD display16×2 is used for displaying the latitude and longitude. LCD display is connected to port 1 of the Microcontroller. Every pin of port 1 is connected to LCD display. Message is sent through commands via serial Communication.

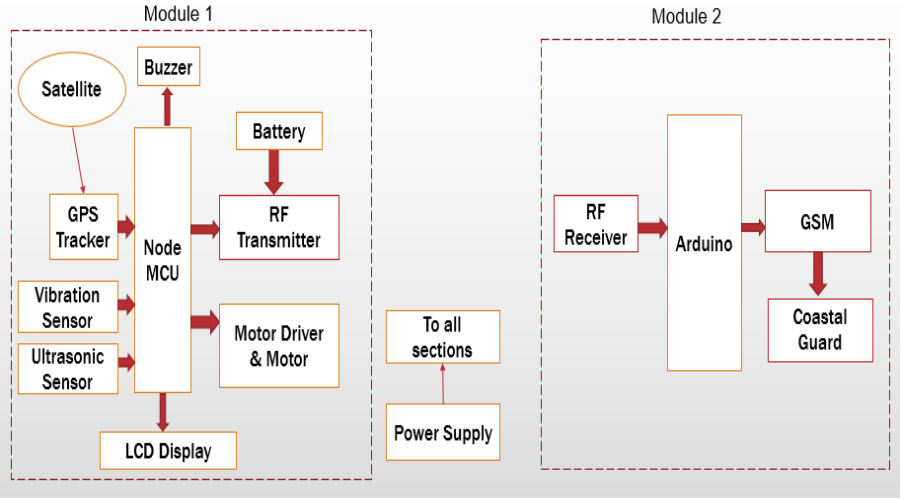

Fig 1 block diagram of proposed method

GPS MODULE

The GPS devices need to be connected to a computer in order to work. This computer can be a home computer, laptop, PDA, digital camera, or smartphones. Depending on the type of computer and available connectors, connections can be made through a serial or USB cable, as well as Bluetooth, CompactFlash, SD, PCMCIA and the newer Express Card. Some PCMCIA/Express Card GPS units also include a wireless modem. Devices usually do not come with pre-installed GPS navigation software, thus, once purchased, the user must install or write their own software. As the user can choose which software to use, it can be better matched to their personal taste. It is very common for a PC-based GPS receiver to come bundled with a navigation software suite. Also, GPS modules are significantly cheaper than complete stand-alone systems (around €50 to €100). The software may include maps only for a particular region, or the entire world, if software such as Google Maps are used.

CONSUMER GPS NAVIGATION DEVICES INCLUDE

1. Dedicated GPS navigation devices.
2. GPS modules that need to be connected to a computer to be used.

3. GPS loggers that record trip information for download. Such GPS tracking is useful for trailblazing, mapping by hikers and cyclists, and the production of geocoded photographs.

4. Converged devices, including GPS Phones and GPS cameras, in which GPS is a feature rather than the main purpose of the device.

5.the majority of GPS devices are now converged devices and may use assisted GPS or standalone (not network dependent) or both. The vulnerability of consumer GPS to radio frequency interference from planned wireless data services is controversial.

Fig 2 GPS Module

GSM MODULE

GSM (Global System for Mobile Communications, originally *Groupe Special Mobile*) is a standard developed by the European Telecommunications Standards Institute (ETSI) to describe the protocols for second-generation digital cellular networks used by mobile devices such as tablets, first deployed in Finland in December 1991. As of 2014, it has become the global standard for mobile communications – with over 90% market share, operating in over 193 countries and territories.

2G networks developed as a replacement for first generation (1G) analogy cellular networks, and the GSM standard originally described as a digital, circuit-switched network optimized for full duplex voice telephony. This expanded over time to include

data communications, first by circuit-switched transport, then by packet data transport via GPRS (General Packet Radio Services) and EDGE (Enhanced Data rates for GSM Evolution, or EGPRS).Subsequently, the 3GPP developed third-generation (3G) UMTS standards, followed by fourth-generation (4G) LTE Advanced standards, which do not form part of the ETSI GSM standard.

A GSM/GPRS module assembles a GSM/GPRS modem with standard communication interfaces like RS-232 (Serial Port), USB etc., so that it can be easily interfaced with a computer or a microprocessor / microcontroller-based system. The power supply circuit is also built in the module that can be activated by using a suitable adaptor.

Fig 3 GSM Module

NODEMCU ESP8266

Espresso System's Smart Connectivity Platform (ESCP) may be a set of high performance, high integration wireless SOCs, designed for space and power constrained mobile platform designers. It provides unsurpassed ability to embed Wi-Fi capabilities within other systems, or to function as a standalone application, with rock bottom cost, and minimal space requirement.

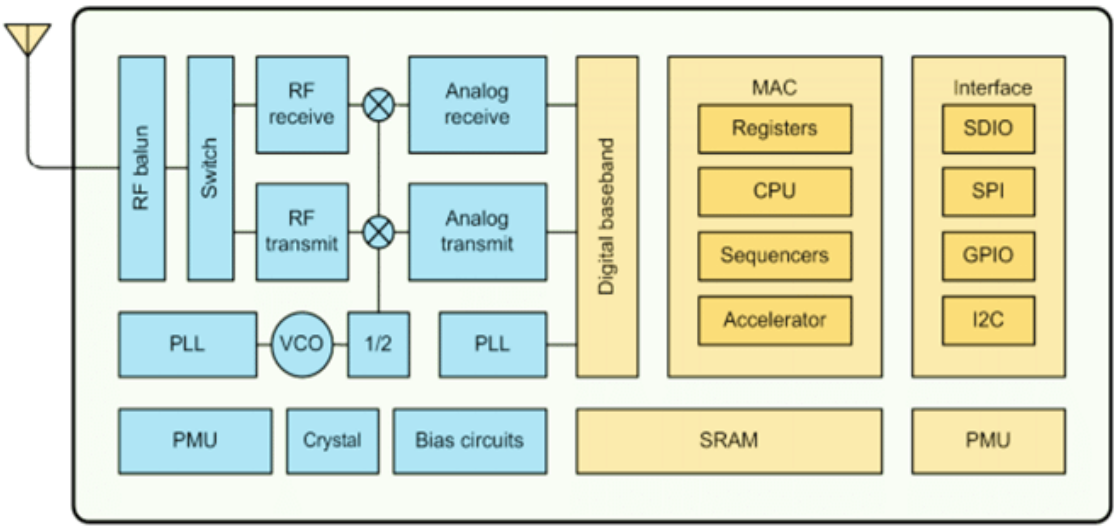

Fig 4 BLOCK DIAGRAM OF ESP8266

ESP8266 offers an entire and self-contained Wi-Fi networking solution; it is often wont to host the appliance or to dump Wi-Fi networking functions from another application processor. When ESP8266EX hosts the appliance, it boots up directly from an external flash. In has integrated cache to enhance the performance of the system in such applications. Alternately, serving as a Wi-Fi adapter, wireless internet access is often added to any micro controller based design with simple connectivity (SPI/SDIO or I2C/UART interface).

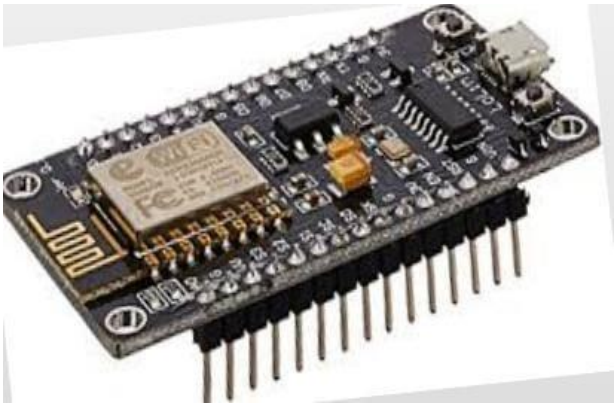

Fig 5 Node MCU

ESP8266EX is among the foremost integrated Wi-Fi contribute the industry; it integrates the antenna switches, RF BALUN, power amplifier, low noise receive amplifier, filters, power management modules, it requires minimal external circuitry, and therefore the entire solution, including front-end module, is meant to occupy minimal

PCB area. ESP8266EX also integrates an enhanced version of Ten silica'sL106 Diamond series 32-bit processor, with on-chip SRAM, besides the Wi-Fi functionalities. ESP8266EX is usually integrated with external sensors and specific devices through its GPIOs; sample codes are provided within the software development kit (SDK).

ARDUINO

The Arduino Uno is a microcontroller board based on the ATmega328. It has 14 digital input/output pins (of which 6 can be used as PWM outputs), 6 analog inputs, a 16 MHz crystal oscillator, a USB connection, a power jack, an ICSP header, and a reset button. It contains everything needed to support the microcontroller; simply connect it to a computer with a USB cable or power it with a AC-to-DC adapter or battery to get started. The Uno differs from all preceding boards in that it does not use the FTDI USB-to-serial driver chip. Instead, it features the Atmega8U2 programmed as a USB-to-serial converter.

"Uno" means one in Italian and is named to mark the upcoming release of Arduino 1.0. The Uno and version 1.0 will be the reference versions of Arduino, moving forward. The Uno is the latest in a series of USB Arduino boards, and the reference model for the Arduino platform, for a comparison with previous versions.

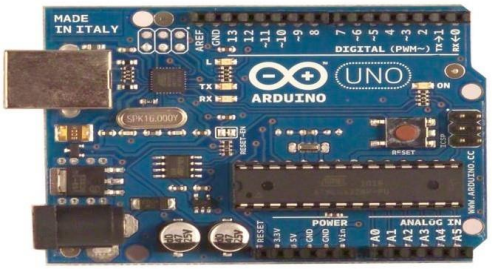

Fig 6 ARDUINO

RF TRANSCEIVER

An RF module (radio frequency module) is a (usually) small electronic device used to transmit and/or receive radio signals between two devices. In an embedded system it is often desirable to communicate with another device wirelessly. This wireless

communication may be accomplished through optical communication or through radio frequency (RF) communication. For many applications the medium of choice is RF since it does not require line of sight.

RF communications incorporate a transmitter and a receiver. They are of various types and ranges. Some can transmit up to 500 feet. RF modules are widely used in electronic design owing to the difficulty of designing radio circuitry. Good electronic radio design is notoriously complex because of the sensitivity of radio circuits and the accuracy of components and layouts required to achieve operation on a specific frequency. In addition, reliable RF communication circuit requires careful monitoring of the manufacturing process to ensure that the RF performance is not adversely affected. Finally, radio circuits are usually subject to limits on radiated emissions, and require Conformance testing and certification by a standardization organization such as the U.S. Federal Communications Commission (FCC).

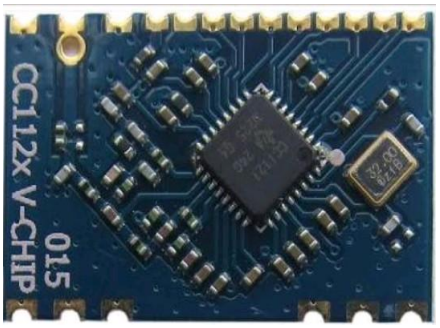

Fig 7 RF MODULE

For these reasons, design engineers will often design a circuit for an application which requires radio communication and then "drop in" a pre-made radio module rather than attempt a discrete design, saving time and money on development. An RF transceiver module incorporates both a transmitter and receiver. The circuit is typically designed for half-duplex operation, although full-duplex modules are available, typically at a higher cost due to the added complexity.

MOTOR DRIVER

The L293 and L293D are quadruple high-current half-H drivers. The L293 is designed to provide bidirectional drive currents of up to 1 A at voltages from 4.5 V to 36 V. The L293D is designed to provide bidirectional drive currents of up to 600-mA at voltages from 4.5 V to 36 V. Both devices are designed to drive inductive loads such as relays, solenoids, dc and bipolar stepping motors, as well as other high-current/high-voltage loads in positive-supply applications. All inputs are TTL compatible. Each output is a complete totem-pole drive circuit, with a Darlington transistor sink and a pseudo-Darlington source. Drivers are enabled in pairs, with drivers 1 and 2 enabled by 1,2EN and drivers 3 and 4 enabled by 3,4EN. When an enable input is high, the associated drivers are enabled, and their outputs are active and in phase with their inputs. When the enable input is low, those drivers are disabled, and their outputs are off and in the high-impedance state. With the proper data inputs, each pair of drivers forms a full-H (or bridge) reversible drive suitable for solenoid or motor applications.

CIRCUIT DIAGRAM

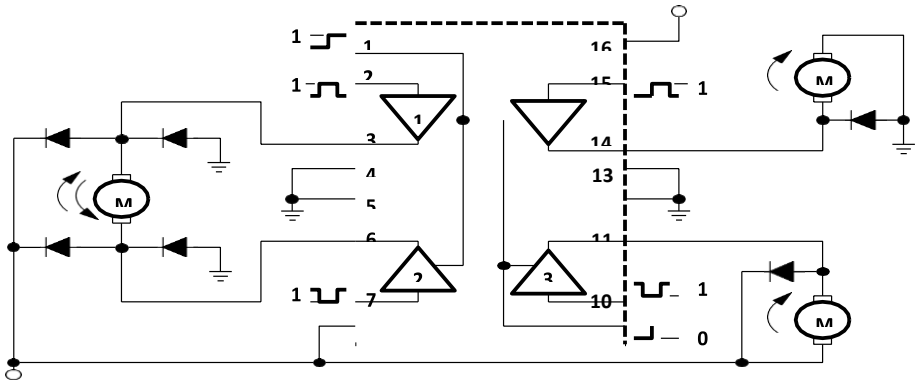

Fig 8 Motor Driver Circuit

BUZZER

Fig 9 Buzzer

A **buzzer** or **beeper** is a signaling device, the word "buzzer" comes from the rasping noise that buzzers made when they were electromechanical devices, operated from stepped- down AC line voltage at 50 or 60 cycles. Other sounds commonly used to indicate that a button has been pressed are a ring or a beep This novel buzzer circuit uses a relay in series with a small audio transformer and speaker. When the switch is pressed, the relay will operate via the transformer primary and closed relay contact. As soon as the relay operates the normally closed contact will open, removing power from the relay, the contacts close and the sequence repeats, all very quickly.so fast that the pulse of current causes fluctuations in the transformer primary, and hence secondary.

A **buzzer** is a small yet efficient component to add sound features to our project/system. It is very small and compact 2-pin structure hence can be easily used on breadboard, Perf Board and even on PCBs which makes this a widely used component in most electronic applications. There are two types are buzzers that are commonly available. The one shown here is a simple buzzer which when powered will make a Continuous Beep.... sound, the other type is called a readymade buzzer which will look bulkier than this and will produce a Beep. Beep. Beep. Sound due to the internal oscillating circuit present inside it.

ULTRASONIC SENSOR

An ultrasonic sensor is an instrument that measures the distance to an object using ultrasonic sound waves. An ultrasonic sensor uses a transducer to send and receive ultrasonic pulses that relay back information about an object's proximity. High-frequency sound waves reflect from boundaries to produce distinct echo patterns. The working principle of this module is simple. It sends an ultrasonic pulse out at 40kHz which travels through the air and if there is an obstacle or object, it will bounce back to the sensor. By calculating the travel time and the speed of sound, the distance can be calculated.

Ultrasonic sensors are a great solution for the detection of clear objects. For liquid level measurement, applications that use infrared sensors, for instance, struggle with this particular use case because of target translucence. For presence detection, ultrasonic sensors detect objects regardless of the color, surface, or material (unless the material is very soft like wool, as it would absorb sound.)

Fig 10 Ultrasonic Sensor

To detect transparent and other items where optical technologies may fail, ultrasonic sensors are a reliable choice. The ultrasonic sensor (or transducer) works on the same principles as a radar system. An ultrasonic sensor can convert electrical energy

into acoustic waves and vice versa. The acoustic wave signal is an ultrasonic wave traveling at a frequency above 18kHz. The famous HC SR04 ultrasonic sensor generates ultrasonic waves at 40kHz frequency.

Typically, a microcontroller is used for communication with an ultrasonic sensor. To begin measuring the distance, the microcontroller sends a trigger signal to the ultrasonic sensor. The duty cycle of this trigger signal is 10µS for the HC-SR04 ultrasonic sensor. When triggered, the ultrasonic sensor generates eight acoustic (ultrasonic) wave bursts and initiates a time counter. As soon as the reflected (echo) signal is received, the timer stops. The output of the ultrasonic sensor is a high pulse with the same duration as the time difference between transmitted ultrasonic bursts and the received echo signal.

VIBRATION SENSOR

At present in the industry like research and development, the ability of monitoring, measuring as well as analysing the vibration is very important. Unfortunately, the suitable techniques for making a measurement system for vibration with precise & repeatable are not always clear to researchers with the shades of test tools & analysis of vibration. There are some challenges related while measuring the vibration which includes a selection of suitable component, the configuration of the system, signal conditioning, analysis of waveform and setup.

The vibration sensor is also called a piezoelectric sensor. These sensors are flexible devices which are used for measuring various processes. This sensor uses the piezoelectric effects while measuring the changes within acceleration, pressure, temperature, force otherwise strain by changing to an electrical charge. This sensor is also used for deciding fragrances within the air by immediately measuring capacitance as well as quality.

VIBRATION SENSOR WORKING PRINCIPLE

The working principle of vibration sensor is a sensor which operates based on different optical otherwise mechanical principles for detecting observed system vibrations.

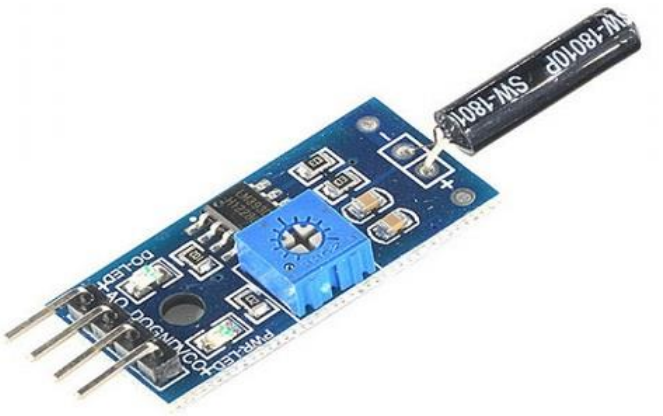

Fig.11 Vibration Sensor

The sensitivity of these sensors normally ranges from 10 mV/g to 100 mV/g, and there are lower and higher sensitivities are also accessible. The sensitivity of the sensor can be selected based on the application. So, it is essential to know the levels of vibration amplitude range to which the sensor will be exposed throughout measurements.

Department of Electronics and Communication Engineering

Vision

To be recognized by the society at large as a full- fledged department, offering quality higher education in the Electronics and Communication Engineering field with research focus catering to the needs of the stakeholders and staying in tune with the advancing technological revolution and cultural changes.

Mission

To achieve the vision, the department will

- Establish a unique learning environment to enable the students to face the challenges in Electronics and Communication Engineering field.
- Promote the establishment of centres of excellence in niche technology areas to nurture the spirit of innovation and creativity among faculty and students.
- Provide ethical and value-based education by promoting activities addressing the societal needs.
- Enable students to develop skills to solve complex technological problems and provide a framework for promoting collaborative and multidisciplinary activities.